Progressive Engineering Inc.

PDG Domus

ICC Acceptance Criteria AC07
Permeability Test

9/16/2004

STATE OF OHIO
WILLIAM R. HEIDEN III
E-65334
REGISTERED PROFESSIONAL ENGINEER

Date Signed September 17, 2004

This test report contains nine (9) pages, including the cover sheet. Any additions to, alterations of, or unauthorized use of excerpts from this report are expressly forbidden.

2004-1641

58640 State Road 15 - Goshen, IN 46528
Phone: 574-533-0337 - Fax: 574-533-2786
www.p-e-i.com

1. TITLE

ICC Acceptance Criteria AC07. Section 4.7 Permeability Test (Last Issued January 2002)

2. OBJECTIVE

To determine the capability of a material to provide resistance of water permeability when exposed to a 2 inch head of water.

3. TESTED FOR

PDG Domus
426 E. Whittier Street
Columbus, OH 43206

4. TESTING ORGANIZATION

Progressive Engineering, Inc.
58640 State Road 15
Goshen, IN 46528
www.p-e-i.com

5. TESTING PERSONNEL

Test Engineer	- William Heiden, P.E.
Director of Testing	- Greg A. Weeden
Laboratory Manager	- Jason R. Holdeman
Technician	- Norm Amstutz

STATE OF OHIO
WILLIAM R. HEIDEN III
E-65334
REGISTERED PROFESSIONAL ENGINEER

Date Signed September 17, 2004

6. TEST EQUIPMENT

A 12.25" x 12.25" I.D. Galvanized Steel Box with a 3/4" shelf around the inside approximately 5" down from the top edge.

7. TEST SPECIMEN

Roof Deck Composite - Part No. 46, 12" x 12", thickness varied from .248" to .346". Top surface had a smooth finish with no coloring.

Deck Cap (Composite) - Part No. 64, 12" x 12", thickness varied from .301 to .362". Top surface had a smooth finish with a gray color and a tile-like appearance.

Roof Shingles (Composite) - Part No. 39, 12" x 12", thickness varied from .151" to .256". Top surface had an 8.5" x 12 rough finish and a 3.5" x 12" smooth finish. A 11/16" diameter tapered hole was located in the smooth area, with a thickness of .154"-156".

See attached drawings for specimen use.

8. TEST SPECIMEN CONSTRUCTION

The test specimens were constructed by the personnel of PDG Domus at their facility. PEI claims no responsibility for verification of the products used in this test.

9. TEST SET-UP

A specimen was placed on the shelf of the galvanized steel box (See Section 6) with the bottom surface on the shelf. The specimen was sealed around its edges and along the underside at the shelf edge.
The box was then placed on blocks to elevate it over the floor. White paper was placed under the specimen, on the floor. Water was then poured into the box a minimum of 2" above the top surface of the specimen. Three (3) specimens of each type were prepared in this manner.

See attached fixture drawing No. F1142 for details.

10. TEST PROCEDURE

The water was allowed to stand for a minimum of 24 hours. The water level was adjusted, as necessary, due to evaporation. Observations were made, once an hour for eight (8) hours and after 24 hours, of the paper and the underside of the specimen for water leakage.

11. TEST RESULTS

See the attached data sheets.

12. CONCLUSION

Based on the specimens provided for the testing all of these materials showed no signs of permeability after 24 hours of standing water. The roof shingles, roof deck, and deck cap have, therefore met the requirements as set in Section 4.7.2 of AC07.

These results pertain to the tested specimen only. It remains the sole responsibility of the manufacturer to provide a consistent product to that which was tested.

STATE OF OHIO
WILLIAM R. HEIDEN III
E-65334
REGISTERED PROFESSIONAL ENGINEER

Date Signed: September 17, 2004

Progressive Engineering, Inc.

Water Permeability Test

Date: 9/16/04

Client: PDG Domus

Test Specimen: 12" x 12" Composite Materials

Roof Shingles

Time (hrs)	Sample No. 1	Sample No. 2	Sample No. 3
1	Pass	Pass	Pass
2	Pass	Pass	Pass
3	Pass	Pass	Pass
4	Pass	Pass	Pass
5	Pass	Pass	Pass
6	Pass	Pass	Pass
7	Pass	Pass	Pass
8	Pass	Pass	Pass
24	Pass	Pass	Pass

Comment: No water dripped from these specimens.

Deck Cap

Time (hrs)	Sample No. 1	Sample No. 2	Sample No. 3
1	Pass	Pass	Pass
2	Pass	Pass	Pass
3	Pass	Pass	Pass
4	Pass	Pass	Pass
5	Pass	Pass	Pass
6	Pass	Pass	Pass
7	Pass	Pass	Pass
8	Pass	Pass	Pass
24	Pass	Pass	Pass

Comment: No water dripped from these specimens.

Roof Decking

Time (hrs)	Sample No. 1	Sample No. 2	Sample No. 3
1	Pass	Pass	Pass
2	Pass	Pass	Pass
3	Pass	Pass	Pass
4	Pass	Pass	Pass
5	Pass	Pass	Pass
6	Pass	Pass	Pass
7	Pass	Pass	Pass
8	Pass	Pass	Pass
24	Pass	Pass	Pass

Comment: No water dripped from these specimens.

The specimens tested did not have any signs of dripping or water formation on their underside. The paper had no signs of water exposure, either.

STATE OF OHIO
WILLIAM R. HEIDEN III
E-65334
REGISTERED PROFESSIONAL ENGINEER

Date Signed September 17, 2004

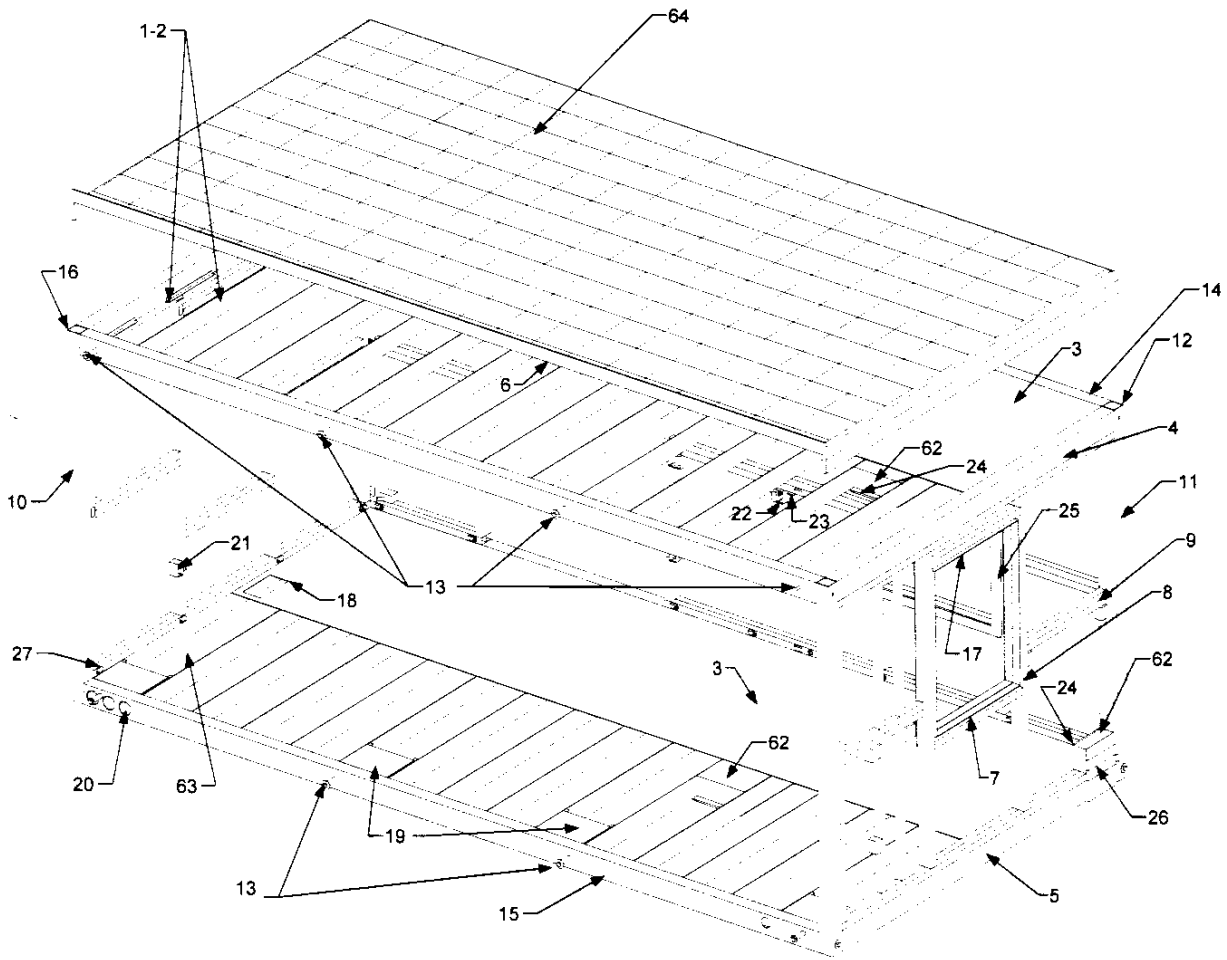

1	Ceiling Joist
2	Floor Joist
3	Floor Plate
4	Top Beam
5	Bottom Beam
6	Header
7	Sill
8	Exterior Wall Stud
9	Exterior Wall Lateral Brace
10	Intermediate Columns
11	Corner Columns
12	Corner Connectors
13	Cell Connectors
14	Top Girder
15	Bottom Girder
16	Intermediate Column Connectors
17	Window Header
18	Floor Vent Cut-out
19	Hatch Cover
20	Duct Portal-4" Typical
21	Electrical Recepticle
22	Electrical Switch
23	Cable
24	Drywall
25	Trim
26	Exterior Panel & Insulation
27	Wall Fastener
62	Insulation
63	Ductwork

64 Deck Cap (composite) non-skid surfaces

Fastened at all four corners with connector pins. Bond all surfaces with Weld-On structural adhesive SS208. Finished edge seal, use Silaprene Solidseal adhesive/sealant.

DRAWING

Definitions-Parts identification
Cell C Deck (typical)

KEY PLAN

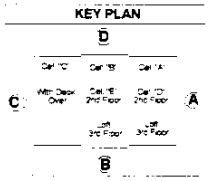

MODEL(S): Hartford

PAGE 9

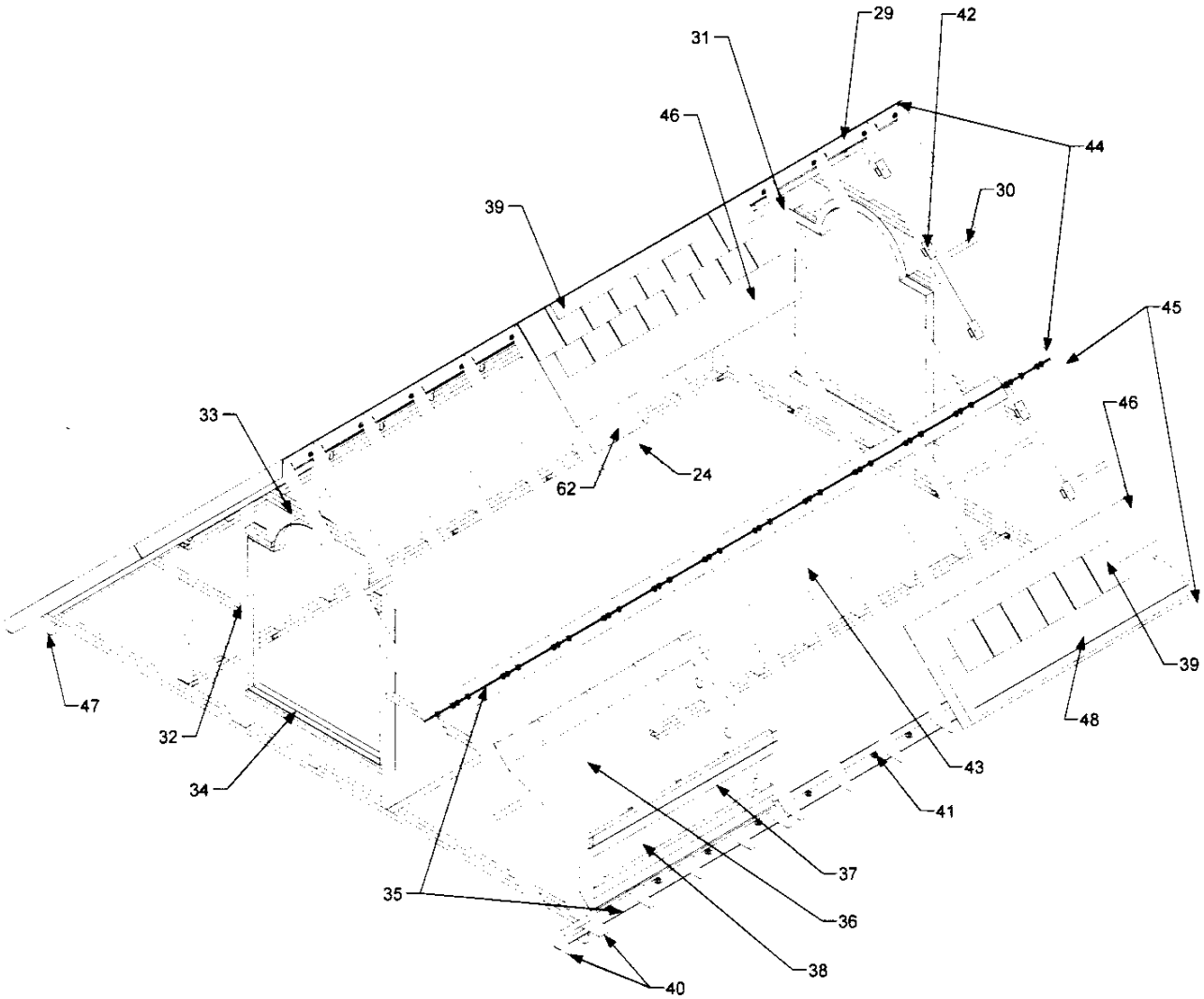

R3DB

24	Drywall
29	Ridge Beam
30	Purlin
31	Rafters
32	End Gable Framing
33	End Gable Window Header
34	End Gable Windowsill
35	Rafter Connector Plate
36	Dormer Rafters
37	Dormer Window Header
38	Dormer Window Opening
39	Roof Shingle-Cap (composite)
40	Flying Gable End
41	Cell to Roof Fastener
42	End Gable Fastener points
43	Knee Wall
44	Upper Roof Section
45	Lower Roof Section
46	Roof Deck (composite)
47	End Gable Connector Pin
48	Box Gutter (composite)
62	Insulation

DRAWING

Definitions-Parts identification Roof (typical)

KEY PLAN

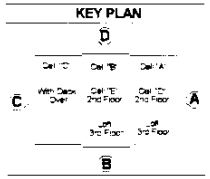

MODEL(S): Hartford

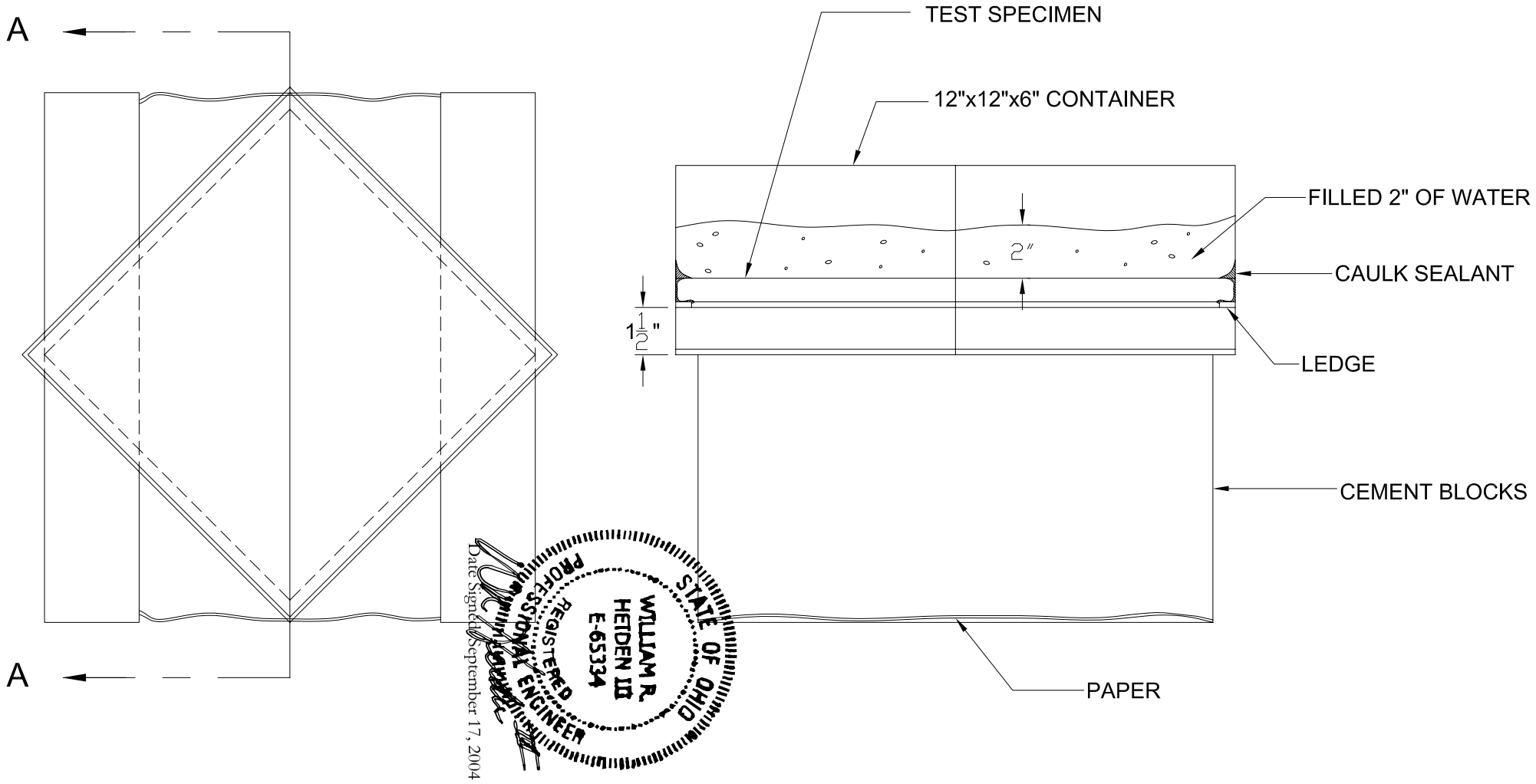

STATE OF OHIO
WILLIAM R. HETDEN III
E-65334
REGISTERED PROFESSIONAL ENGINEER

Date Signed September 17, 2004

DWN. BY: A.BENDER	This drawing and all information contained herein is the property of PROGRESSIVE ENGINEERING, INC. and is not to be reproduced without the written permission of Pei. Pei assumes no responsibility for unauthorized use of this drawing.	Progressive Engineering Inc.
DATE: 9/16/04		58640 State Road 15 Goshen, IN 46528 Phone (574) 533-0337 Fax (574) 533-9736
SCALE:		www.p-e-i.com
DRAWING NUMBER F1142	TITLE: TEST SET-UP	

Test Setup

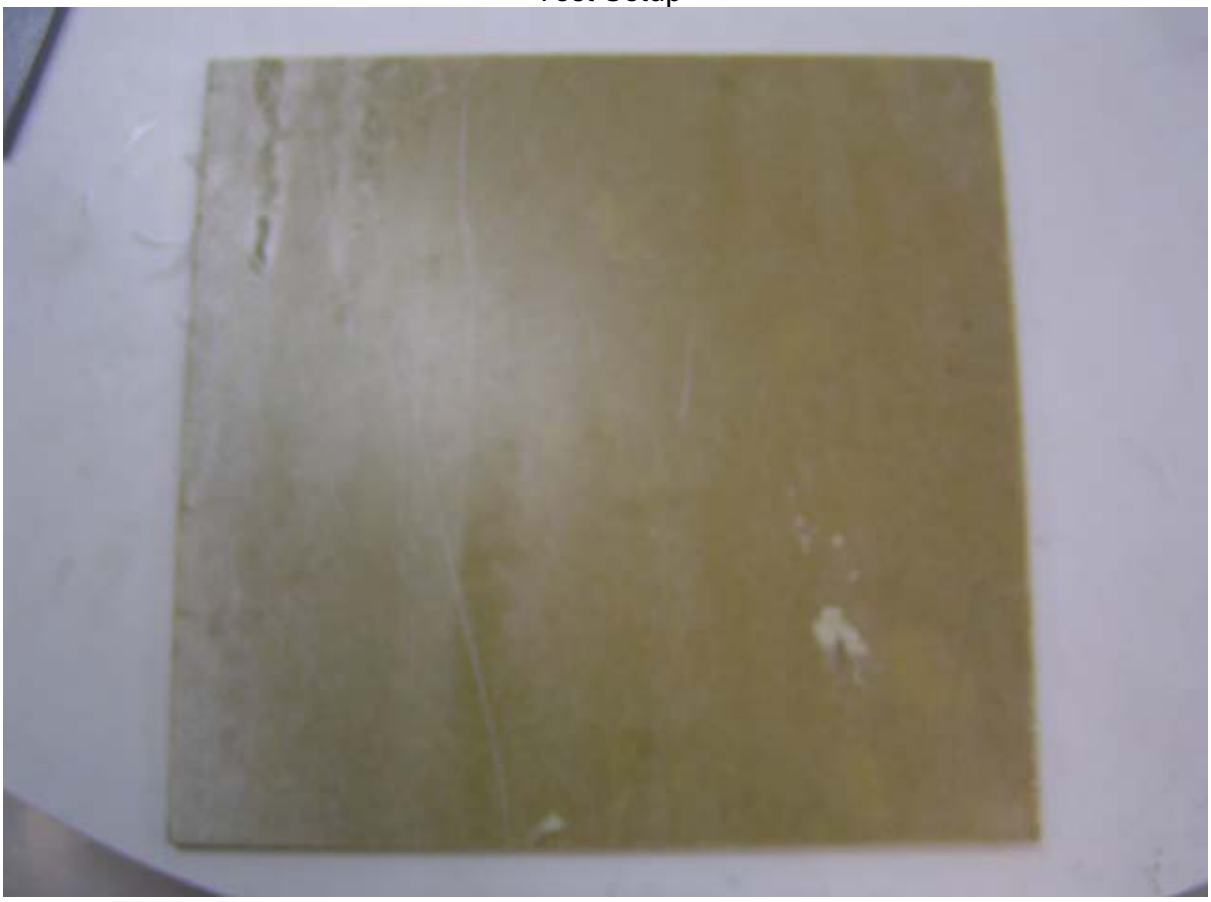

Roof Deck Specimen (Smooth Surface)

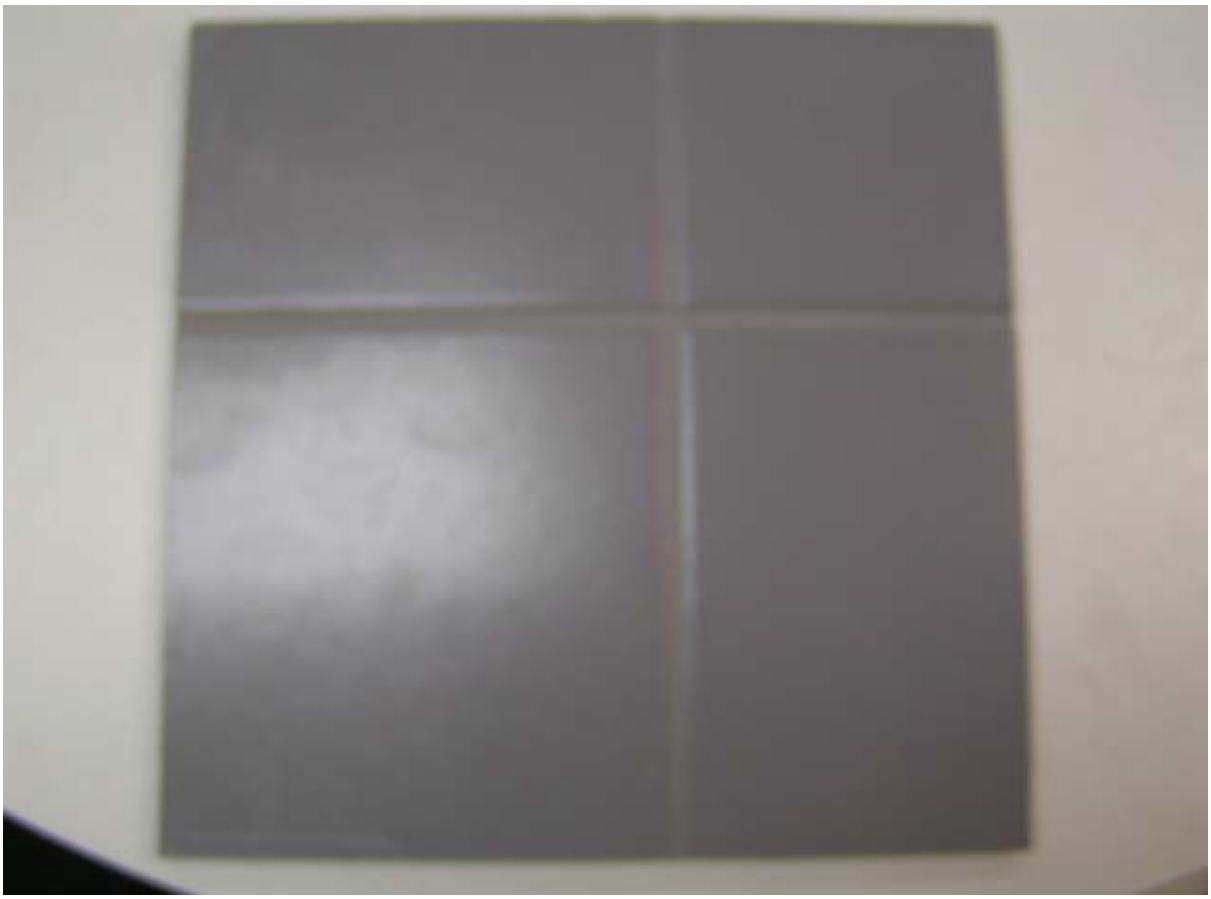

Deck Cap

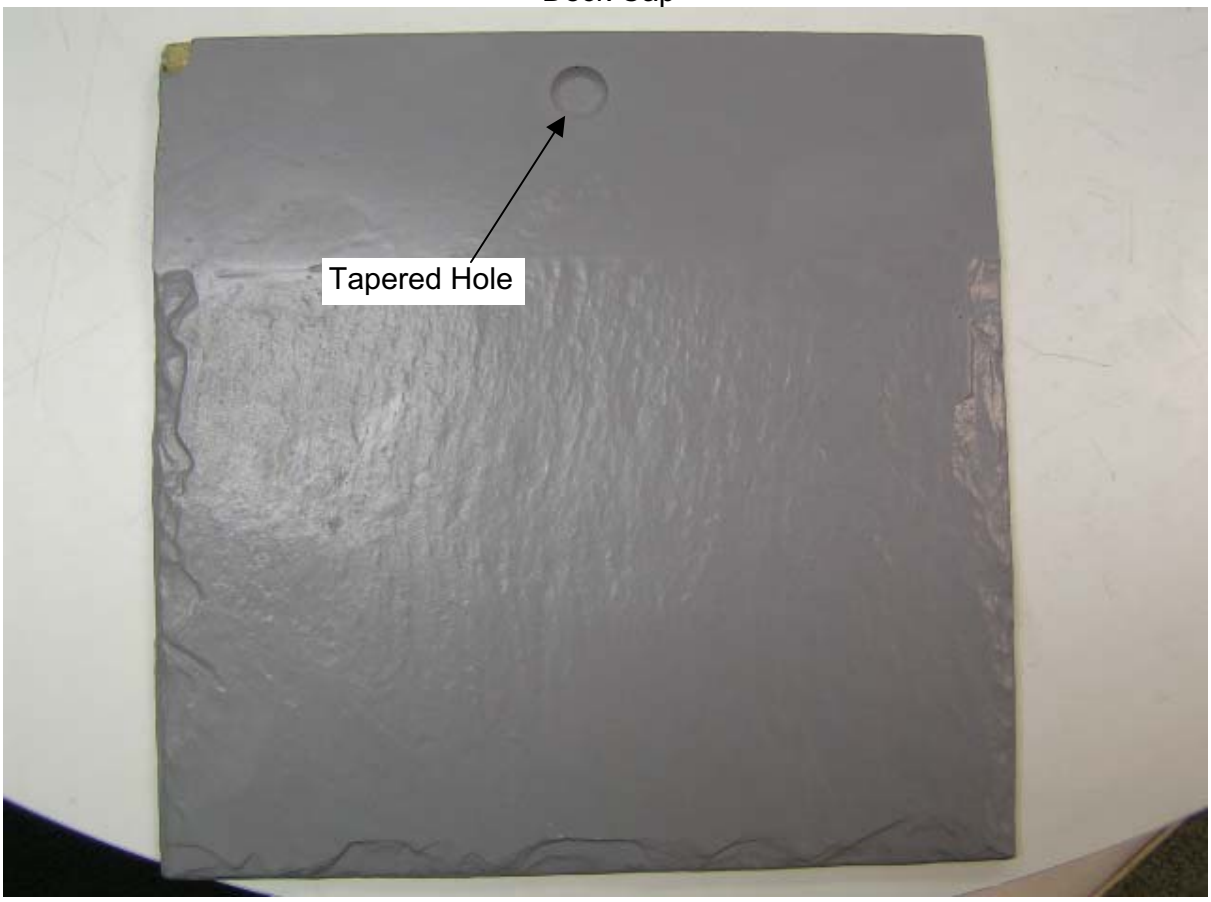

Roof Shingle