Progressive Engineering Inc.

This document is part of Ohio I. U. Approved manuals of file PDG Domus 060323-1.

PDG Domus

Positive Uniform Load Test
on a Roof Section

9/7/2004

STATE OF OHIO
WILLIAM R. HEIDEN III
E-65334
REGISTERED PROFESSIONAL ENGINEER

Date Signed September 17, 2004

This test report contains ten (10) pages, including the cover sheet. Any additions to, alterations of, or unauthorized use of excerpts from this report are expressly forbidden.

2004-1642

58640 State Road 15 - Goshen, IN 46528
Phone: 574-533-0337 - Fax: 574-533-2786
www.p-e-i.com

1. TITLE

Positive Uniform Load Test on a Roof Section

2. OBJECTIVE

To apply a positive uniform load to a roof section and record the recovery deflection of the roof deck and the shingles.

3. TESTED FOR

PDG Domus
426 E. Whittier Street
Columbus, OH 43206

4. TESTING ORGANIZATION

Progressive Engineering, Inc.
58640 State Road 15
Goshen, IN 46528
www.p-e-i.com

5. TESTING PERSONNEL

Test Engineer	- William Heiden, P.E.
Director of Testing	- Greg A. Weeden
Laboratory Manager	- Jason R. Holdeman
Technician	- Rodd Lehman

STATE OF OHIO
WILLIAM R. HEIDEN III
E-65334
REGISTERED PROFESSIONAL ENGINEER

Date Signed September 17, 2004

This test was witnessed by Nathan Pingel of PDG Domus.

6. TEST EQUIPMENT

Suction Fixture - PEI #372
Water Manometer - PEI #076
Vacuum - PEI #374
1" Dial Indicators - PEI #430,448,449,438,447,434 and 433

7. TEST SPECIMEN

A 50" X 50 -1/2" roof section, see attached drawing no. R3DB for details. The test specimen consisted of the following parts as found on the drawing: Drywall (24), Three Rafters(31), *2.5 lb. Foam Insulation (62), Roof Deck (46), and six courses of Shingles (39). All of the parts were mechanically fastened and/or adhered together.

* - Foam Density provided by Nathan Pingel

8. TEST SPECIMEN CONSTRUCTION

The test specimen was constructed by the personnel of PDG Domus at their facility. PEI claims no responsibility for verification of the products used in this test.

9. TEST SET-UP

One (1) roof section sample was placed in a test fixture with the fiberglass shingle panels up. A 2" x 2" steel tube was placed under one end of the roof sample and the steel overhang angle iron was used at the other end for bearing locations. Four (4) mil polyethylene sheeting was placed over the test fixture and taped down. Dial indicators were placed across the three (3) rafters at the midspan, and also on the fiberglass shingle panels at the center of each of the rafter spans.

See attached fixture drawing No.'s F1140 and F1141 for details.

10. TEST PROCEDURE

A minimal vacuum (<1 PSF) was applied to the specimen to seat the visqueen over the shingles. The initial deflection readings were then taken with no load applied. A 10 PSF load was then applied and held for a minimum of 1 minute before taking the deflection readings. The load was then released and the specimen was allowed 1 minute of recovery prior to taking the "No Load" readings. This process was performed in 10 PSF increments up to 80 PSF. After taking the " No Load" deflection readings at 80 PSF, the loading was continued in 10 PSF increments until the 280 PSF load was attained, with no further "No Load" readings. Each incremental load was maintained for 1 minute prior to taking the deflection readings. The loading was increased to 350 PSF and 380 PSF with deflection readings recorded for both. The 380 PSF load was maintained for a minimum of 10 minutes.

After the 380 PSF load was released, "No Load" or residual readings were taken at 2.5 minutes, 5 minutes, 45 minutes and 18.75 hours.

STATE OF OHIO
WILLIAM R. HEIDEN III
E-65334
REGISTERED PROFESSIONAL ENGINEER

Date Signed: September 17, 2004

11. TEST RESULTS

See the attached data sheets.

12. CONCLUSION

Based on the results attained from the test specimen provided, the fiberglass shingle panels and roof deck can sustain a positive pressure of 380 PSF without component failure. In addition, after releasing the maximum load, the system recovered to within 92.4% of its original position. (Based on an average recovery at dial indicators #2,3,5 and 6.)

These results pertain to the tested specimen only. It remains the sole responsibility of the manufacturer to provide a consistent product to that which was tested.

Progressive Engineering Inc.

ROOF DECKING PANEL TEST

Date: 9/7/2004
Client: PDG Domus

Panel Size: 50" x 50.5"
Shingle Clear Span: 22"
Joist Clear Span: 42.5"

Test Specimen: Roof Section including shingles, decking, steel tube framing, foam core insulation and drywall.

Test No. 1

		Ind. No.1		Ind. No.2		Ind. No.3		Ind. No.4		Ind. No.5		Ind. No.6		Ind. No.7	
Time	Load Increment	Reading	Defl.	Reading	Defl.	Reading	Defl.	Reading	Defl.	Reading	Defl.	Reading	Defl.	Reading	Defl.
11:45	No Load	.914	--	.981	--	.890	--	.800	--	.700	--	.932	--	.907	--
	10 PSF	.912	.002	.974	.007	.888	.002	.799	.001	.694	.006	.916	.016	.902	.006
	No Load	.914	.000	.981	.000	.889	.001	.800	.000	.700	.000	.912	.020	.900	.000
	20 PSF	.907	.007	.964	.017	.882	.008	.797	.003	.686	.014	.914	.018	.904	.014
	No Load	.912	.002	.981	.000	.888	.002	.799	.001	.699	.001	.916	.016	.900	.001
	30 PSF	.901	.013	.958	.023	.873	.017	.793	.007	.682	.018	.908	.024	.905	.018
	No Load	.911	.003	.981	.000	.888	.002	.799	.001	.699	.001	.916	.016	.900	.001
	40 PSF	.892	.022	.950	.031	.851	.039	.771	.029	.676	.024	.894	.038	.900	.024
	No Load	.904	.010	.973	.008	.880	.010	.795	.005	.698	.002	.916	.016	.901	.002
	50 PSF	.885	.029	.943	.038	.841	.049	.770	.030	.670	.030	.881	.051	.877	.030
	No Load	.897	.017	.967	.014	.872	.018	.790	.010	.694	.006	.908	.024	.900	.006
	60 PSF	.874	.040	.937	.044	.828	.062	.769	.031	.666	.034	.871	.061	.894	.034
	No Load	.895	.019	.966	.015	.870	.020	.789	.011	.694	.006	.907	.025	.900	.006
	70 PSF	.872	.042	.935	.046	.824	.066	.767	.033	.663	.037	.868	.064	.893	.037
	No Load	.895	.019	.966	.015	.870	.020	.789	.011	.694	.006	.907	.025	.900	.006
	80 PSF	.873	.041	.928	.053	.826	.064	.769	.031	.657	.043	.871	.061	.894	.043
	90 PSF	.870	.044	.927	.054	.817	.073	.765	.035	.655	.045	.862	.070	.893	.045
	100 PSF	.868	.046	.925	.056	.808	.082	.761	.039	.650	.050	.854	.078	.890	.050
	110 PSF	.867	.047	.925	.056	.803	.087	.759	.041	.647	.053	.849	.083	.889	.053
	120 PSF	.865	.049	.918	.063	.798	.092	.756	.044	.643	.057	.845	.087	.887	.057
	130 PSF	.864	.050	.915	.066	.793	.097	.754	.046	.639	.061	.841	.091	.886	.061
	140 PSF	.863	.051	.911	.070	.788	.102	.752	.048	.634	.066	.837	.095	.885	.066
	150 PSF	.862	.052	.907	.074	.784	.106	.750	.050	.629	.071	.833	.099	.885	.071
	160 PSF	.861	.053	.904	.077	.779	.111	.747	.053	.626	.074	.828	.104	.884	.074
	170 PSF	.860	.054	.901	.080	.774	.116	.745	.055	.622	.078	.824	.108	.882	.078
	180 PSF	.859	.055	.897	.084	.769	.121	.742	.058	.618	.082	.820	.112	.881	.082
	190 PSF	.858	.056	.894	.087	.765	.125	.740	.060	.616	.084	.815	.117	.880	.084
	200 PSF	.857	.057	.890	.091	.762	.128	.738	.062	.610	.090	.812	.120	.880	.090
	210 PSF	.856	.058	.887	.094	.757	.133	.735	.065	.607	.093	.808	.124	.879	.093
	220 PSF	.856	.058	.883	.098	.754	.136	.733	.067	.603	.097	.804	.128	.878	.097
	230 PSF	.855	.059	.880	.101	.749	.141	.730	.070	.601	.099	.799	.133	.877	.099
	240 PSF	.853	.061	.877	.104	.743	.147	.727	.073	.598	.102	.795	.137	.876	.102
	250 PSF	.852	.062	.874	.107	.740	.150	.725	.075	.595	.105	.791	.141	.875	.105
	260 PSF	.852	.062	.871	.110	.736	.154	.723	.077	.592	.108	.787	.145	.874	.108
	270 PSF	.851	.063	.868	.113	.733	.157	.721	.079	.590	.110	.784	.148	.874	.110
	280 PSF	.850	.064	.864	.117	.726	.164	.718	.082	.586	.114	.778	.154	.872	.114
	350 PSF	.847	.067	.843	.138	.708	.182	.707	.093	.569	.131	.760	.172	.871	.131
	380 PSF	.841	.073	.835	.146	.687	.203	.696	.104	.562	.138	.744	.188	.868	.138
Residual	2.5 min.	.892	.022	.960	.021	.861	.029	.784	.016	.689	.011	.901	.031	N/A	N/A
	5 min.	.893	.021	.962	.019	.863	.027	.785	.015	.690	.010	.903	.029	N/A	N/A
	45 min.	.895	.019	.967	.014	.870	.020	.789	.011	.695	.005	.910	.022	N/A	N/A
	18hr 45min	.896	.018	.968	.013	.873	.017	.790	.010	.696	.004	.913	.019	N/A	N/A

Maximum Load Attained: 380 PSF (73" of water)
Failure: None

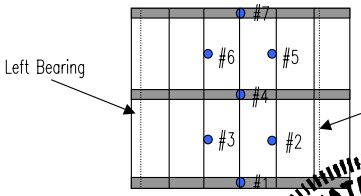

STATE OF OHIO
WILLIAM R. HEIDEN III
E-65334
REGISTERED PROFESSIONAL ENGINEER

Date Signed: September 17, 2004

TEST SUMMARY

Date: 9/7/2004
Client: PDG Domus

Panel Size: 50" x 50.5"
Shingle Clear Span: 22"
Joist Clear Span: 42.5"

Test Specimen: Roof Section including shingles, decking, steel tube framing, foam core insulation and drywall.

Test No. 1

Recovery Time Elapsed

Location	2.5 min	5 min	45 min	18.75 hrs
Indicator #2	85.6%	87.0%	90.4%	91.1%
Indicator #3	85.7%	86.7%	90.1%	91.6%
Indicator #5	92.0%	92.8%	96.4%	97.1%
Indicator #6	83.5%	84.6%	88.3%	89.9%
Average	**86.7%**	**87.8%**	**91.3%**	**92.4%**

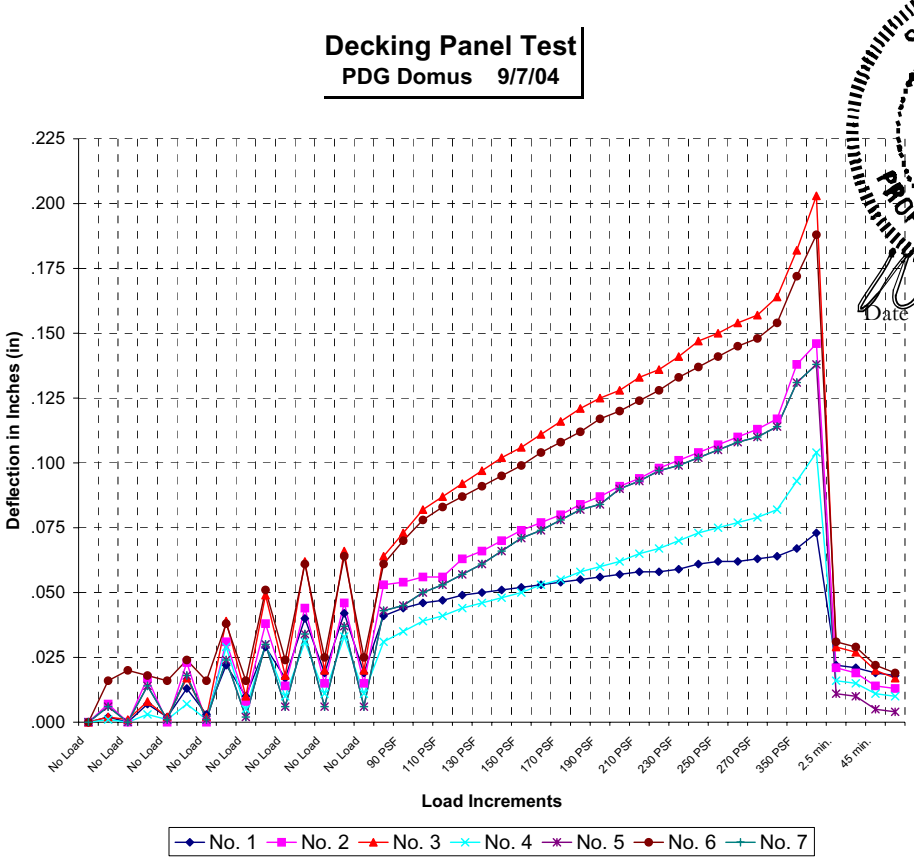

STATE OF OHIO
WILLIAM R. HEIDEN III
E-65334
REGISTERED PROFESSIONAL ENGINEER

Date Signed September 17, 2004

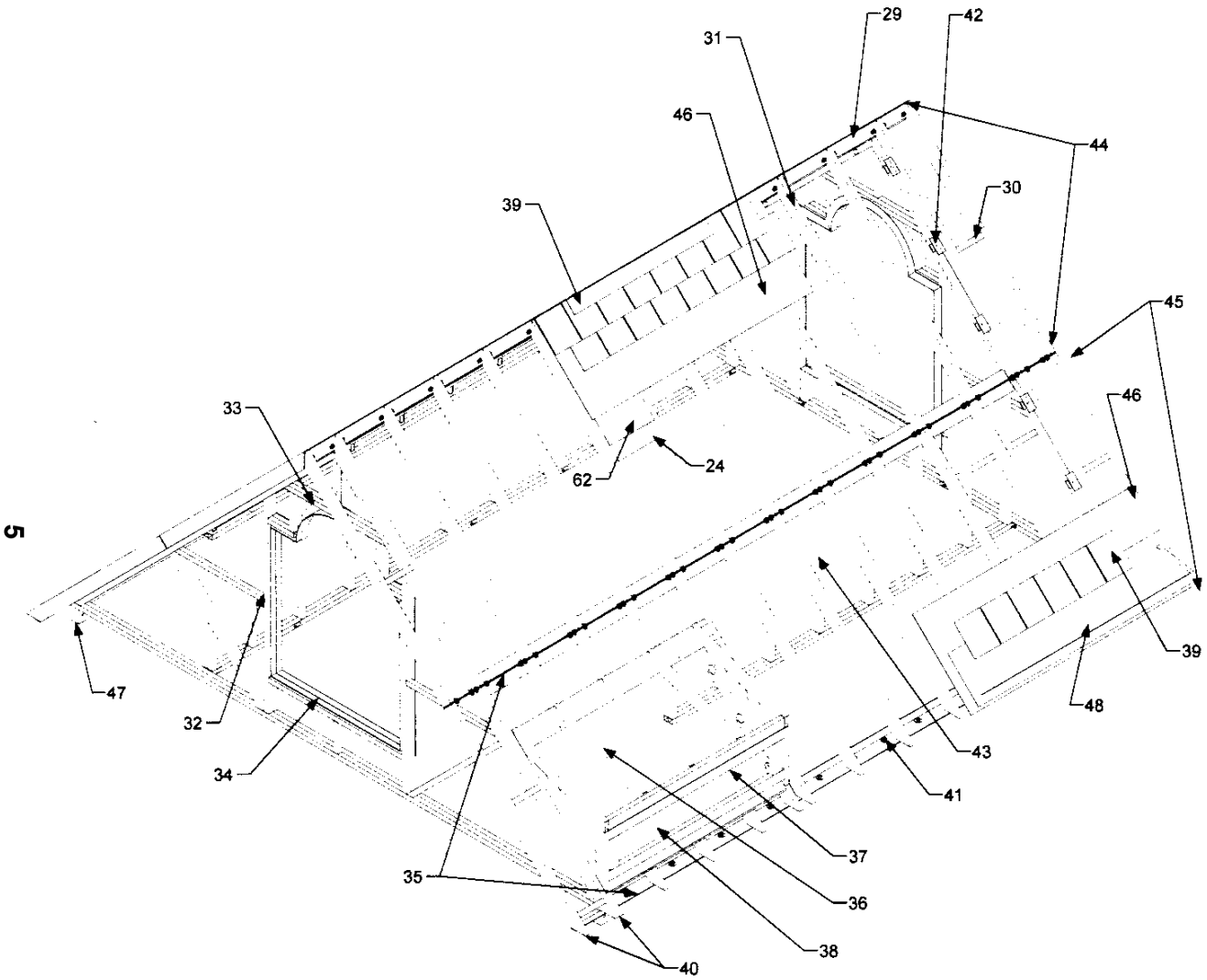

24	Drywall
29	Ridge Beam
30	Purlin
31	Rafters
32	End Gable Framing
33	End Gable Window Header
34	End Gable Windowsill
35	Rafter Connector Plate
36	Dormer Rafters
37	Dormer Window Header
38	Dormer Window Opening
39	Roof Shingle-Cap (composite)
40	Flying Gable End
41	Cell to Roof Fastener
42	End Gable Fastener points
43	Knee Wall
44	Upper Roof Section
45	Lower Roof Section
46	Roof Deck (composite)
47	End Gable Connector Pin
48	Box Gutter (composite)
62	Insulation

R3DB

DRAWING

Definitions-Parts identification Roof (typical)

KEY PLAN

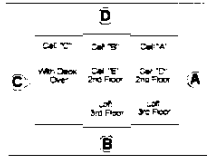

MODEL(S): Hartford

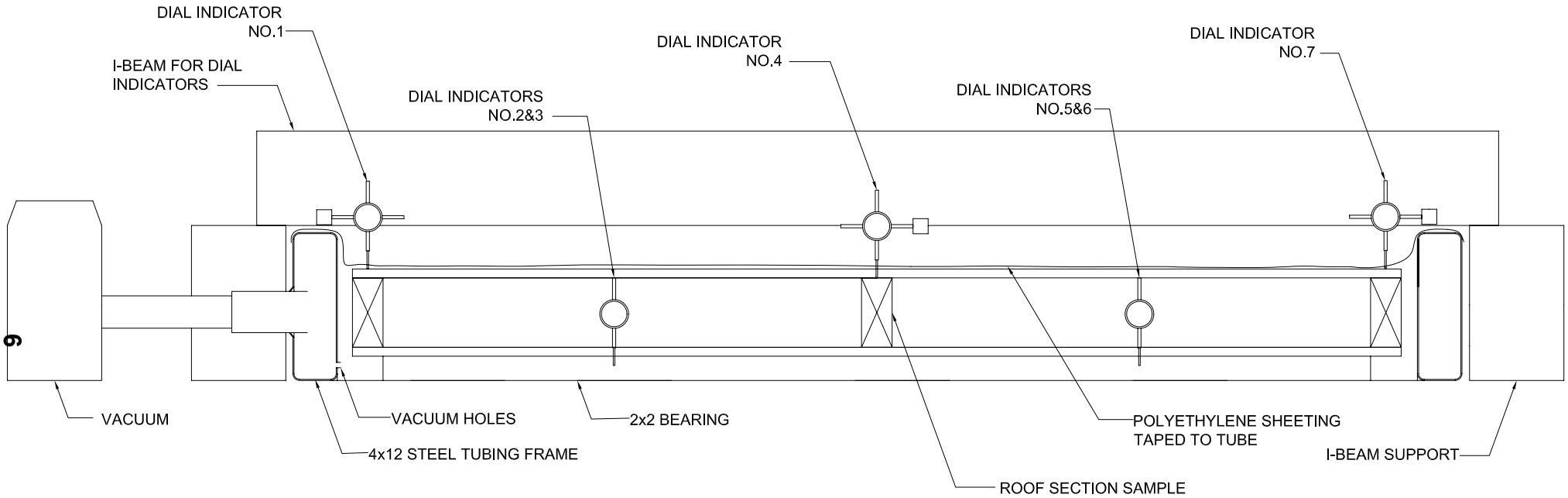

SECTION A-A

STATE OF OHIO
WILLIAM R. HETDEN III
E-65334
REGISTERED PROFESSIONAL ENGINEER

Date Signed September 17, 2004

DWN. BY:	A.BENDER
DATE:	9/9/04
SCALE:	
DRAWING NUMBER	F1140

This drawing and all information contained herein is the property of PROGRESSIVE ENGINEERING, INC. and is not to be reproduced without the written permission of Pei. Pei assumes no responsibility for unauthorized use of this drawing.

TITLE: TEST SET-UP

Progressive Engineering Inc.
58640 State Road 15
Goshen, IN 46528
Phone (574) 533-0337
Fax (574) 533-9736
www.p-e-i.com

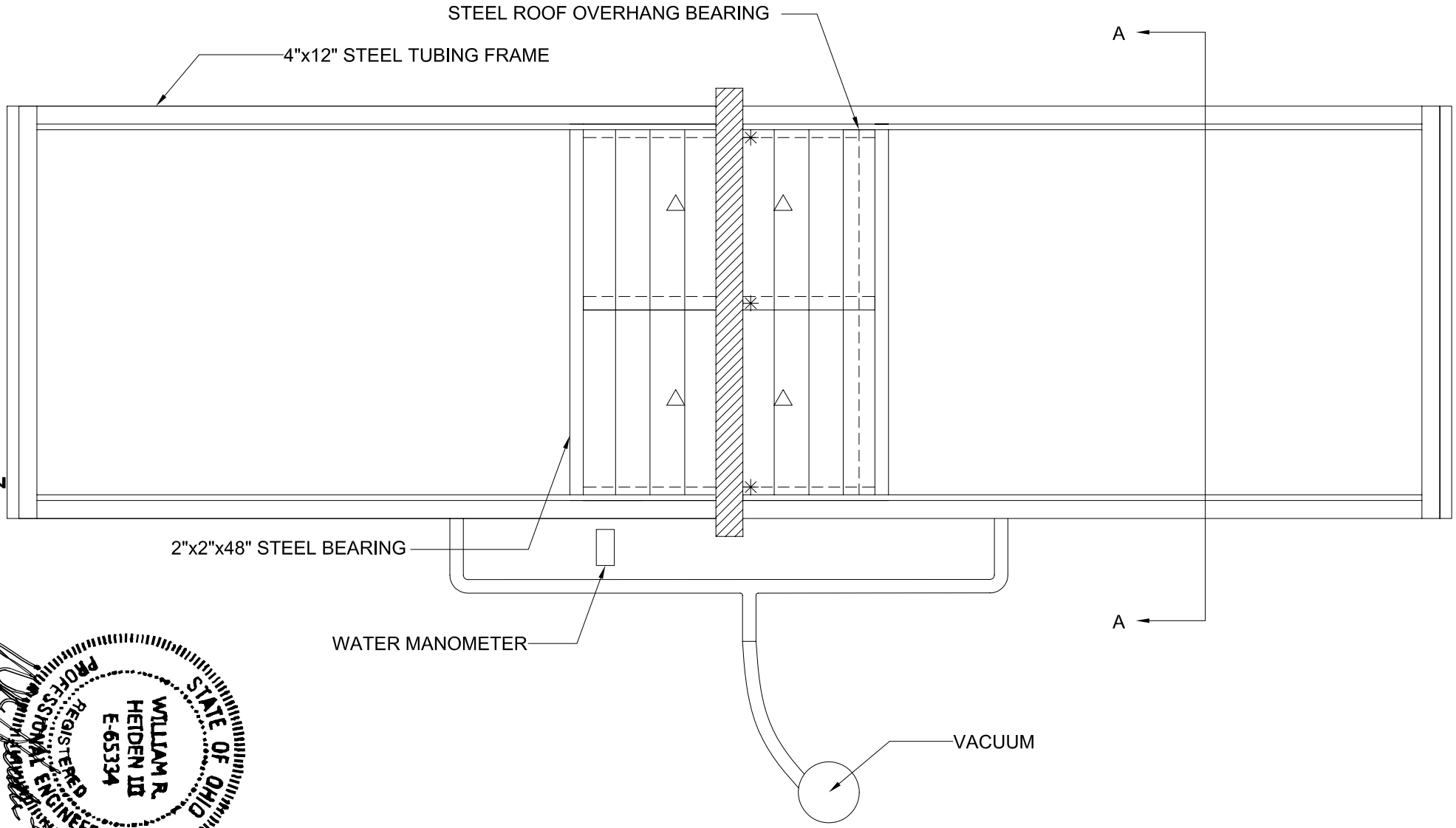

7

STATE OF OHIO
WILLIAM R. HEIDEN III
E-65334
REGISTERED PROFESSIONAL ENGINEER

Date Signed September 17, 2004

△ - DEFLECTION GAUGE INSET AT MIDSPAN BETWEEN RAFTERS

✳ - DEFLECTION GAUGE ON ROOFING MATERIAL OVER THE STUDS

DWN. BY: A.BENDER	This drawing and all information contained herein is the property of PROGRESSIVE ENGINEERING, INC. and is not to be reproduced without the written permission of Pei. Pei assumes no responsibility for unauthorized use of this drawing.
DATE: 9/9/04	
SCALE:	
DRAWING NUMBER F1141	TITLE: TEST SET-UP

Progressive Engineering Inc.
58640 State Road 15
Goshen, IN 46528
Phone (574) 533-0337
Fax (574) 533-9736
www.p-e-i.com

Test Set-up

Test Specimen with 380 PSF applied

Test Specimen with 380 PSF applied